Two Finger Parallel SoftGripper - 75° Cone Angle 2 Positions - Bundle

SG.GB.2F.1V

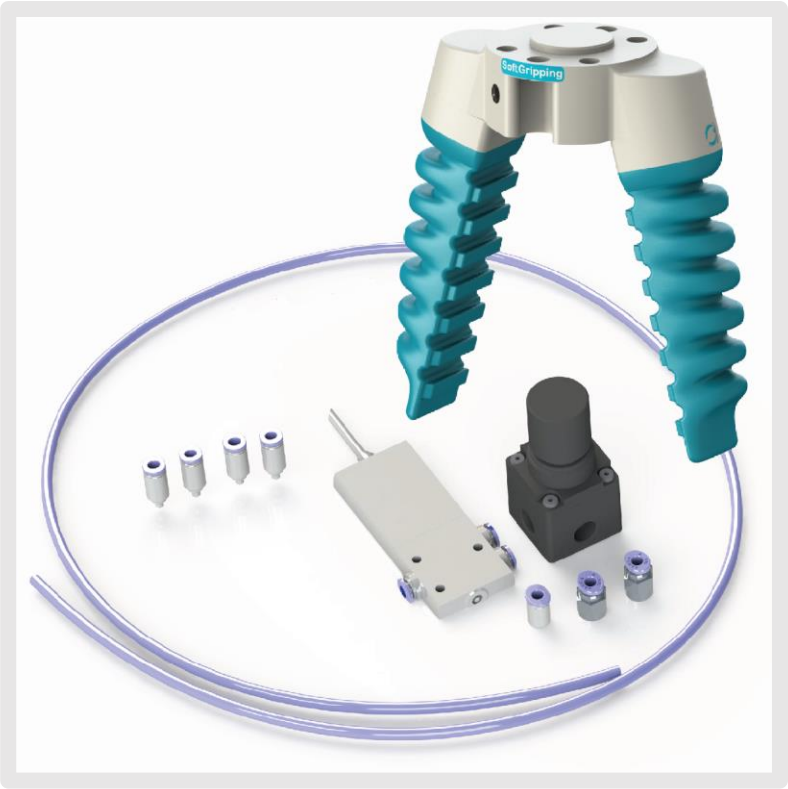

Product Code	Part	Amount
SG.2P.75D.31	Two Finger Parallel SoftGripper - 75° Cone Angle	1
SG.KT.P00001	Festo Solenoid valve MHE2-M1H-3/2G-QS-4-K	1
SG.KT.P00003	AirCom pressure regulator 0,2-2,5 bar R307-01B	1
SG.KT.P00008	Straight plug connector R1/8-4mm IQSG-184-I	2
SG.KT.P00006	Festo 4 mm tubing PUN-4X0,75 BL	5 m
SG.KT.P00005	Straight plug connector IQSM-M34-I	5

Two Finger Parallel SoftGripper - 75° Cone Angle 2 Positions - Bundle
SG.GB.2F.1V

This package is intended to have your SoftGripper up and running in no time. It includes a pneumatic accessory kit for operating the SoftGripper with a Festo Solenoid valve and control the pressure via a pressure regulator. The solenoid valve can provide two positions: Grip and Relaxed. Of course, all necessary tubing, connectors and screws are provided as well. Keep in mind that the connector on the SoftGripper is ISO 9404-1-31.5-2-M5. Other connectors are available online.

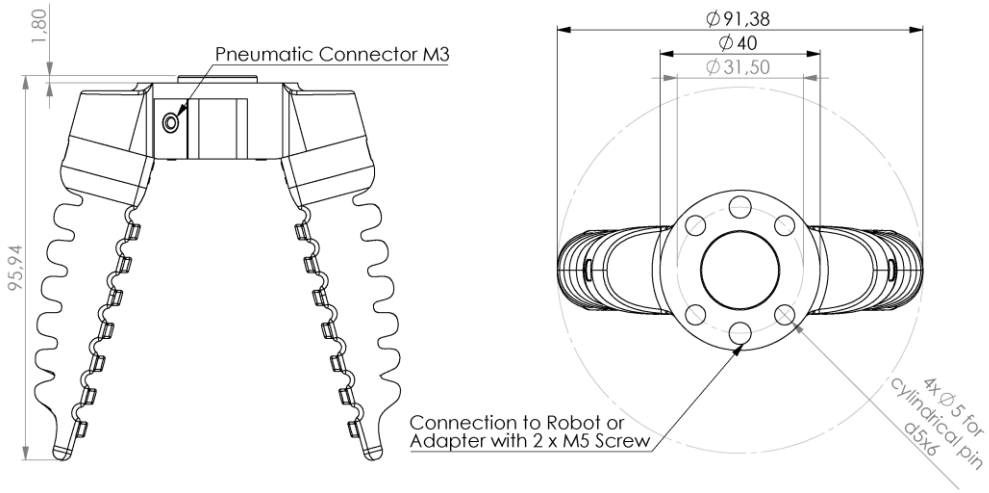

Finger Material	Silicone
Operating Pressure	- 0.5 to 1.0 bar
Grip Force per Finger	5 N
Durability	> 10 Mio. Cycles @1.0 bar, 0.5 Hz
Connector	ISO 9404-1-31.5-2-M5
Air Pressure Connection	2 x M3
Total Height 75°	95,94 mm
Total Diameter 75°	91,38 mm
Mass	143 g
Typical Gripping Objects	• Rectangular or Cubic • Feed size 10 mm – 90 mm • Weight < 200 g